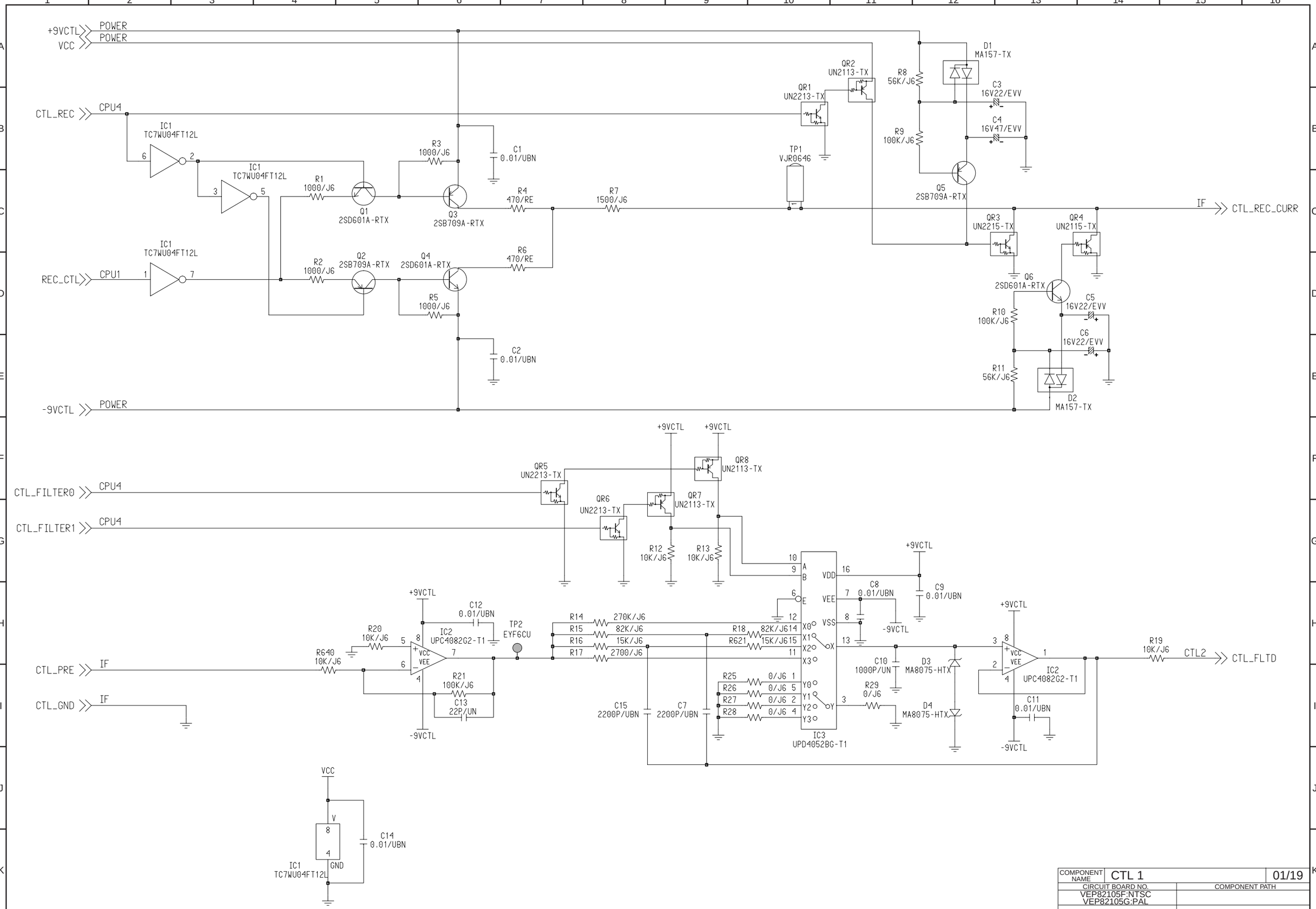

COMPONENT NAME	CTL 1	01/19
CIRCUIT BOARD NO.		COMPONENT PATH
VEP82105F:NTSC VEP82105G:PAL		
KR2A28(1/19)		SCM12

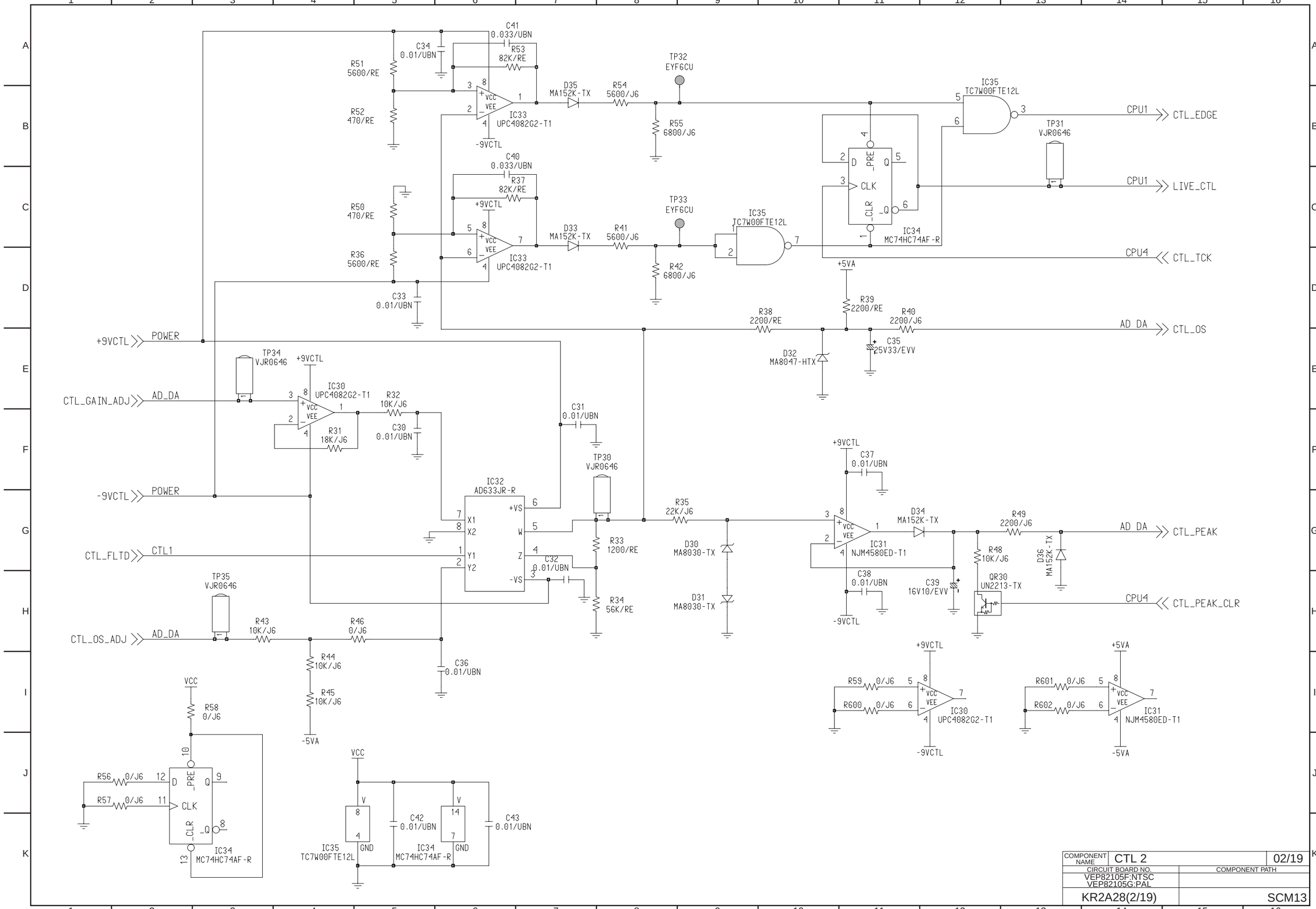

COMPONENT NAME	CTL 2	02/19
CIRCUIT BOARD NO.		COMPONENT PATH
VEP82105F:NTSC VEP82105G:PAL		
KR2A28(2/19)		SCM13

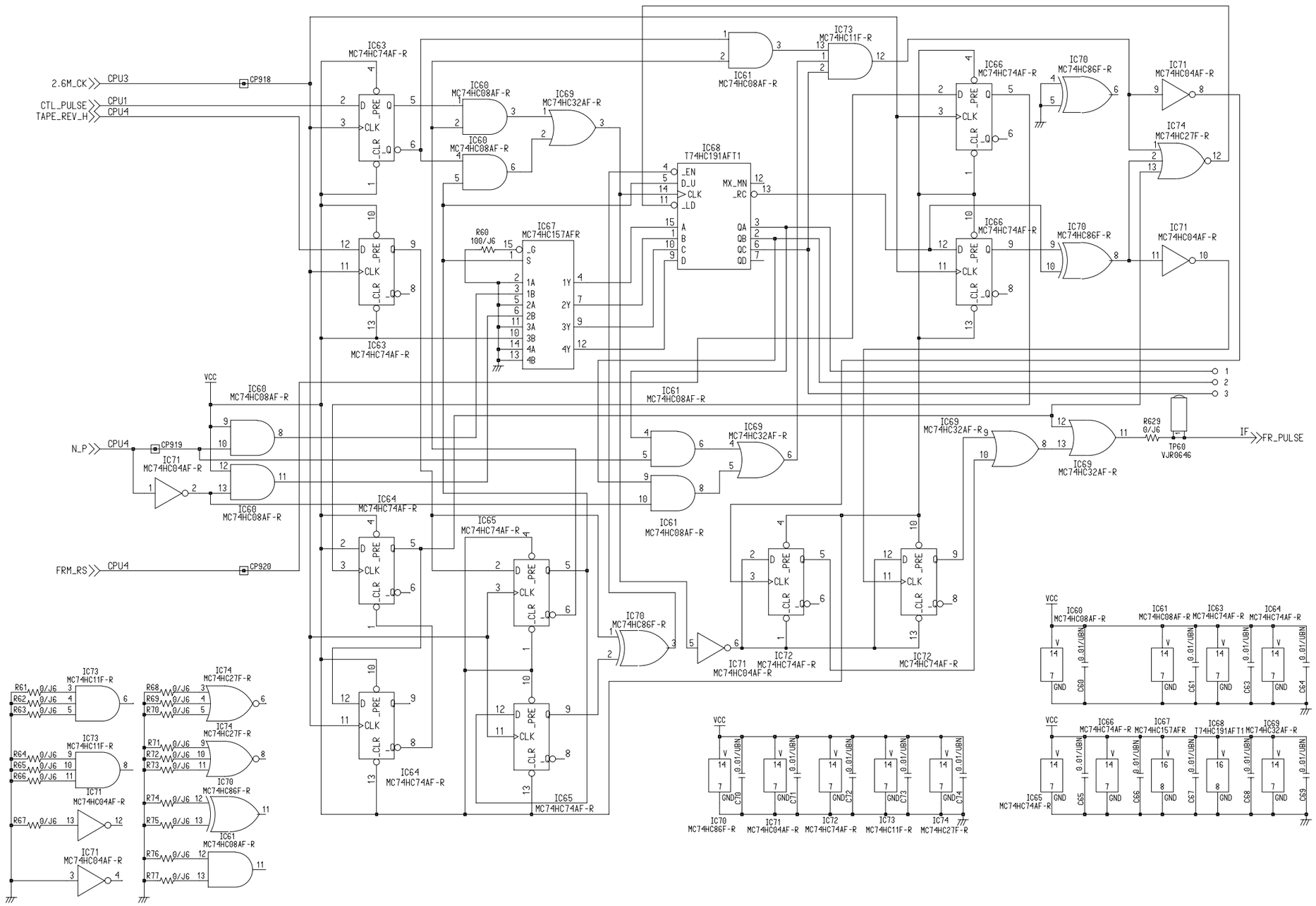

COMPONENT NAME	CTL 3	03/19
CIRCUIT BOARD NO.		COMPONENT PATH
VEP82105F:NTSC VEP82105G:PAL		
KR2A28(3/19)		SCM14

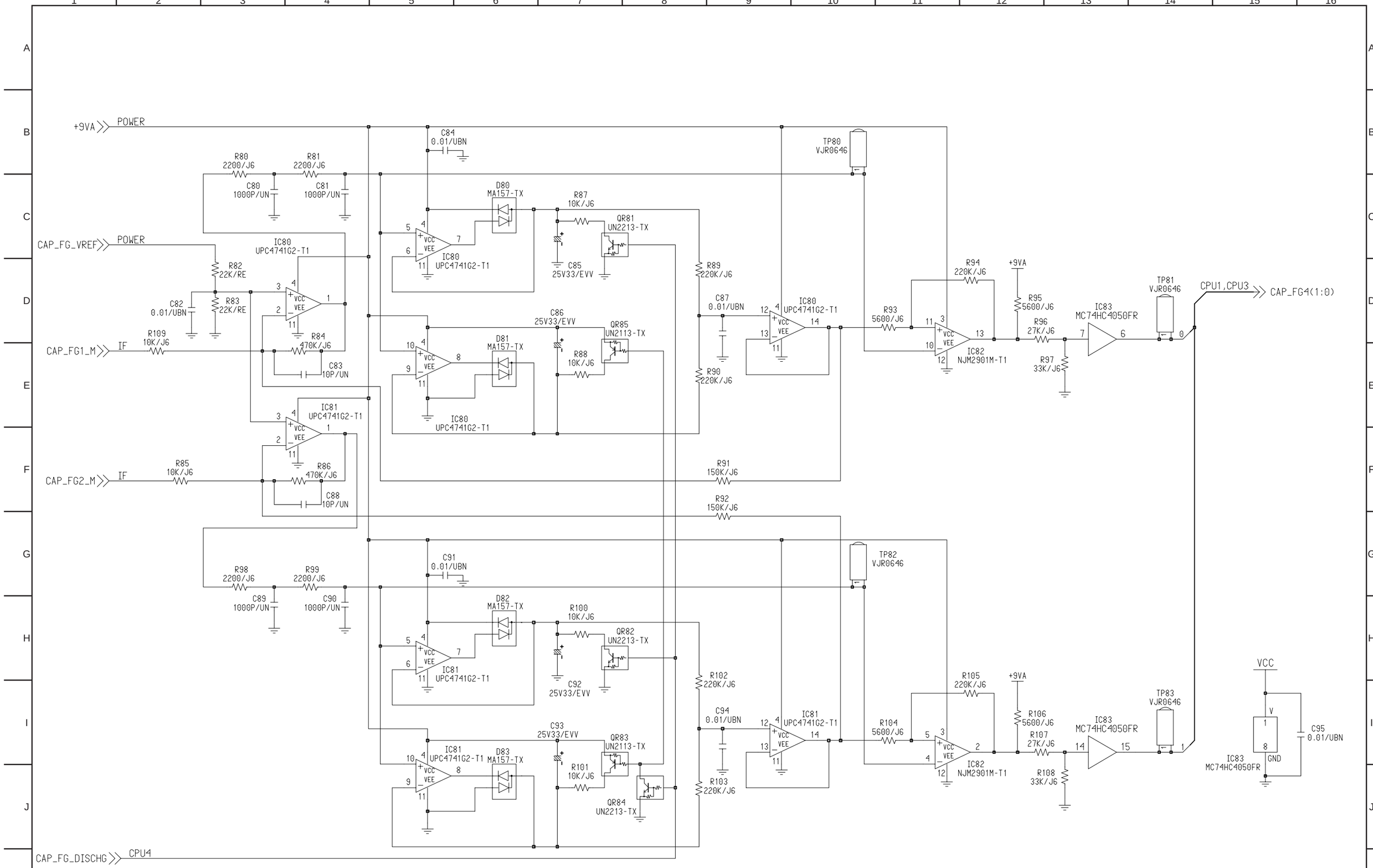

COMPONENT NAME	CAP_FG	04/19
CIRCUIT BOARD NO.	COMPONENT PATH	
VEP82105F:NTSC VEP82105G:PAL		
KR2A28(4/19)		SCM15

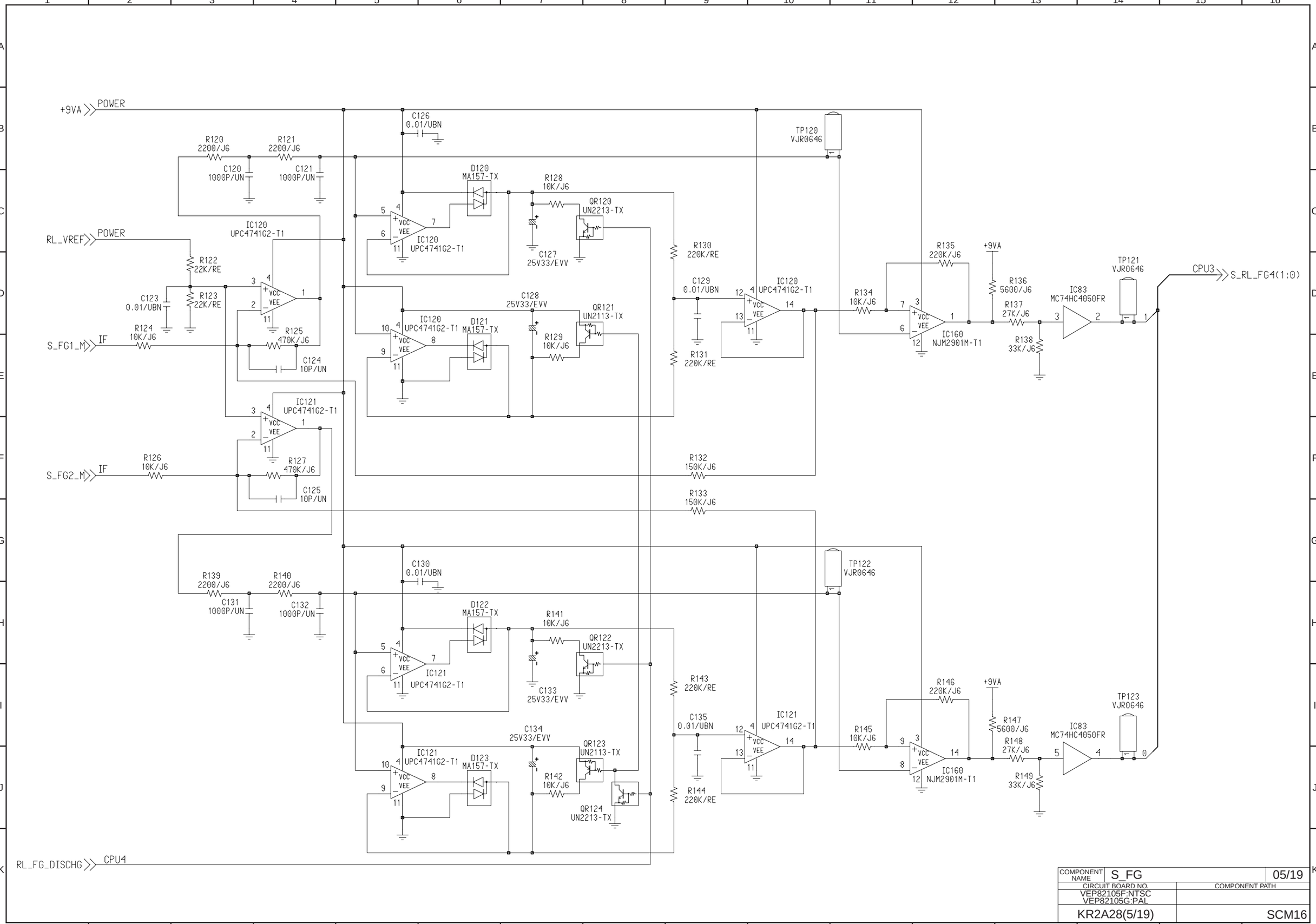

COMPONENT NAME	S_FG	05/19
CIRCUIT BOARD NO.	COMPONENT PATH	
VEP82105F:NTSC VEP82105G:PAL		
KR2A28(5/19)	SCM16	

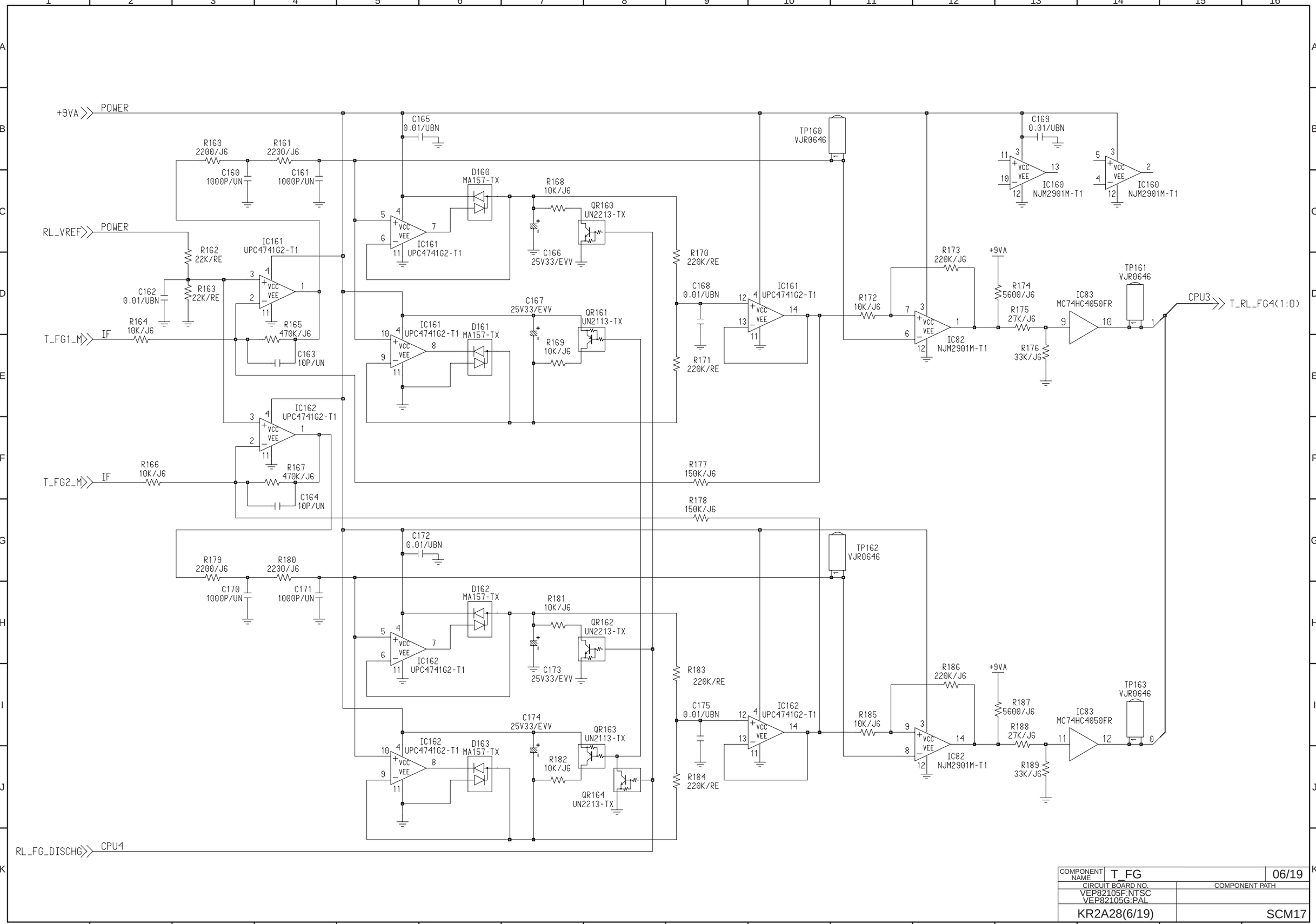

COMPONENT NAME	T_FG	06/19
CIRCUIT BOARD NO.	COMPONENT PATH	
VEP82105F:NTSC VEP82105G:PAL		
KR2A28(6/19)		SCM17

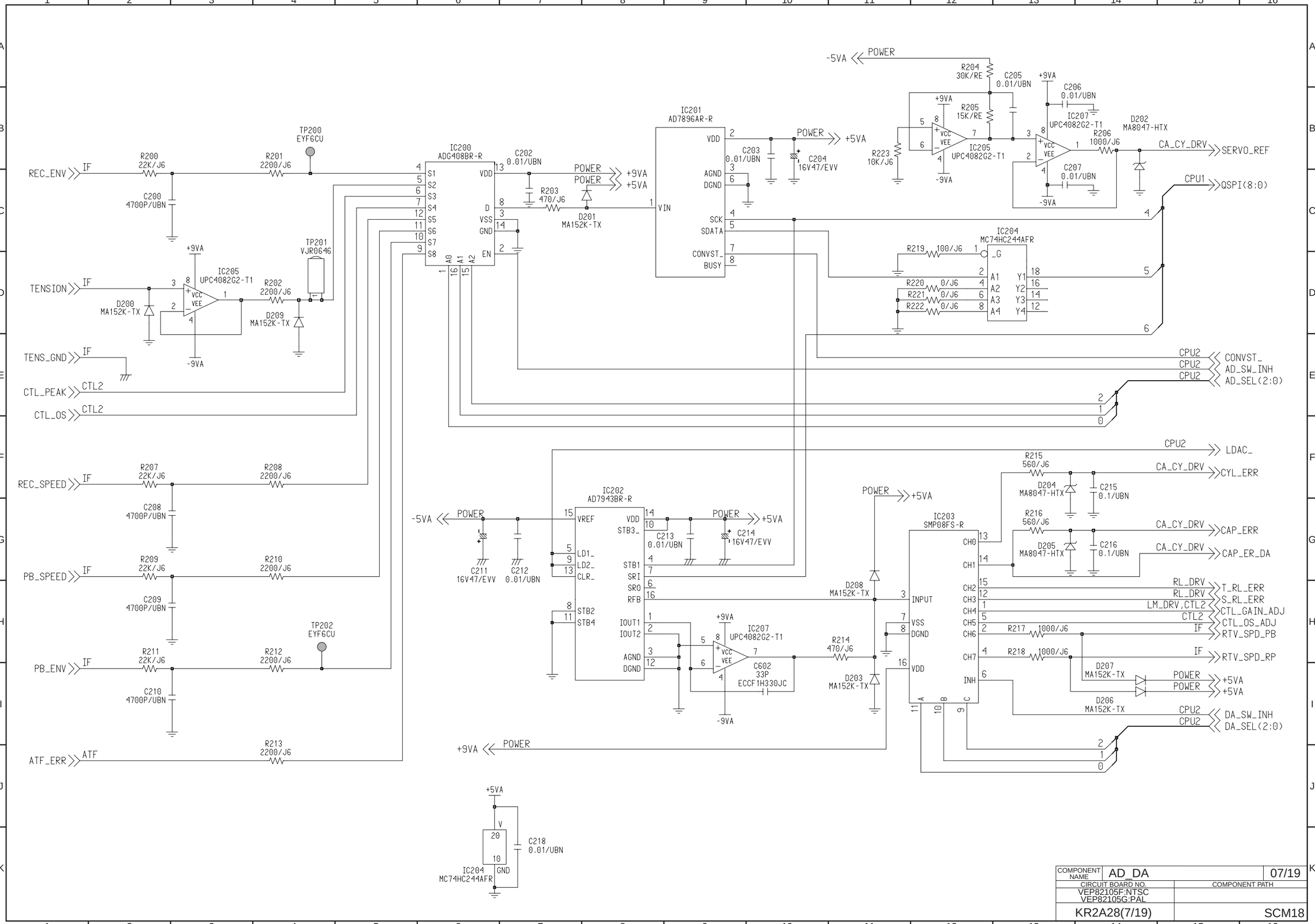
REC_ENV
IF
R200 22K/J6
C200 4700P/UBN
R201 2200/J6
TP200 EYF6CU
TENSION
D200 MA152K-TX
IC205 UPC4082G2-T1
R202 2200/J6
D209 MA152K-TX
TP201 VJR0646
TENS_GND
CTL_PEAK
CTL2
CTL_OS
REC_SPEED
R207 22K/J6
R208 2200/J6
C208 4700P/UBN
PB_SPEED
R209 22K/J6
R210 2200/J6
C209 4700P/UBN
PB_ENV
R211 22K/J6
R212 2200/J6
C210 4700P/UBN
TP202 EYF6CU
ATF_ERR
ATF
R213 2200/J6
IC200 ADG408BR-R
C202 0.01/UBN
R203 470/J6
D201 MA152K-TX
POWER
+9VA
+5VA
IC201 AD789GAR-R
C203 0.01/UBN
C204 16V47/EVV
-5VA
R204 30K/RE
C205 0.01/UBN
R205 15K/RE
R223 10K/J6
IC205 UPC4082G2-T1
C206 0.01/UBN
IC207 UPC4082G2-T1
R206 1000/J6
C207 0.01/UBN
D202 MA8047-HTX
CA_CY_DRV
SERVO_REF
CPU1
QSPI(8:0)
IC204 MC74HC244AFR
R219 100/J6
R220 0/J6
R221 0/J6
R222 0/J6
CPU2
CONVST_
AD_SW_INH
AD_SEL(2:0)
LDAC_
IC202 AD7943BR-R
C211 16V47/EVV
C212 0.01/UBN
C213 0.01/UBN
C214 16V47/EVV
IC207 UPC4082G2-T1
C602 33P ECCF1H330JC
R214 470/J6
D208 MA152K-TX
D203 MA152K-TX
IC203 SMP08FS-R
R215 560/J6
D204 MA8047-HTX
C215 0.1/UBN
R216 560/J6
D205 MA8047-HTX
C216 0.1/UBN
CYL_ERR
CAP_ERR
CAP_ER_DA
RL_DRV
T_RL_ERR
S_RL_ERR
LM_DRV,CTL2
CTL_GAIN_ADJ
CTL_OS_ADJ
RTV_SPD_PB
RTV_SPD_RP
R217 1000/J6
R218 1000/J6
D207 MA152K-TX
D206 MA152K-TX
DA_SW_INH
DA_SEL(2:0)
IC204 MC74HC244AFR
C218 0.01/UBN
COMPONENT NAME
AD_DA
07/19
CIRCUIT BOARD NO.
VEP82105F:NTSC
VEP82105G:PAL
COMPONENT PATH
KR2A28(7/19)
SCM18

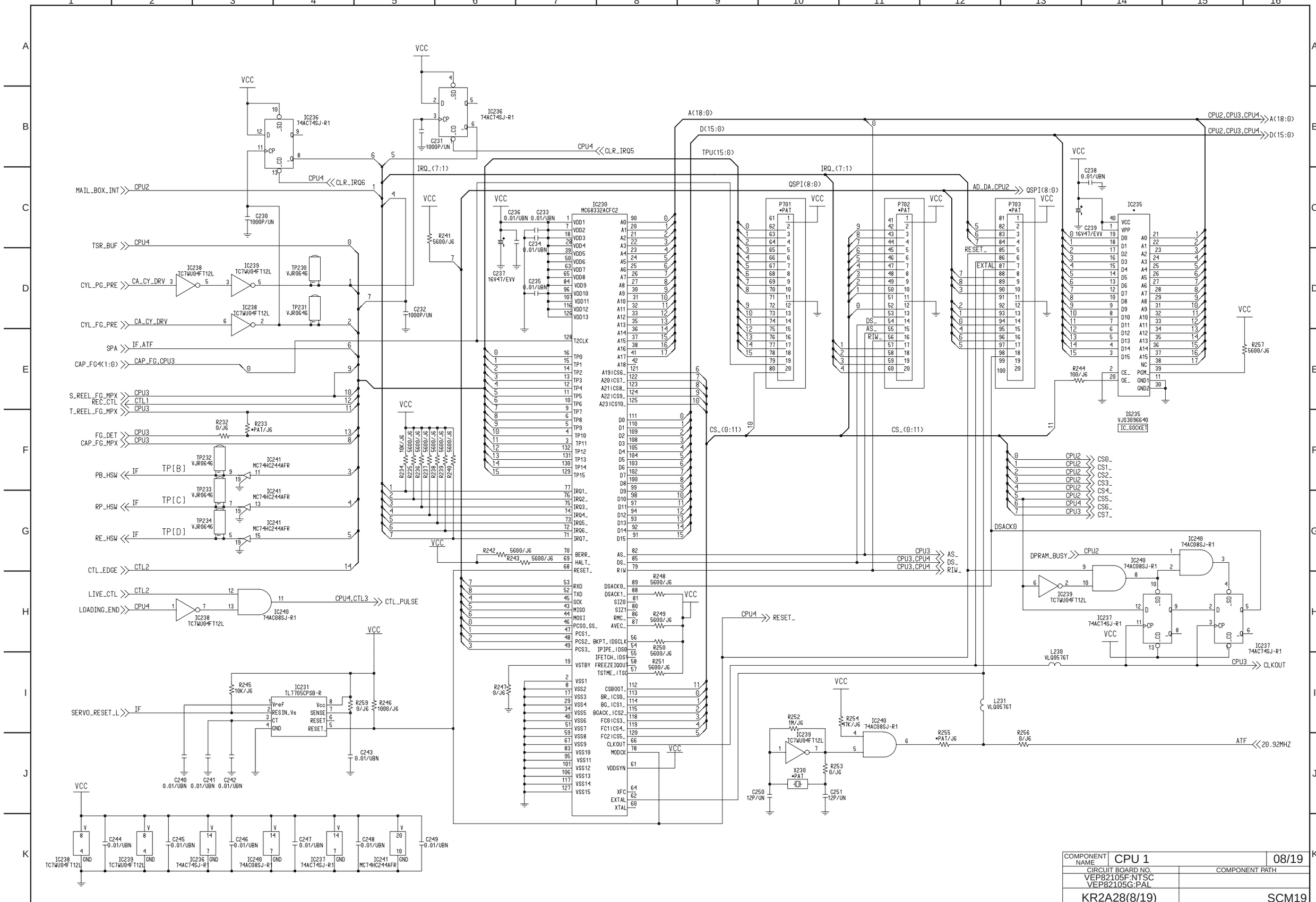

COMPONENT NAME	CPU 1	08/19
CIRCUIT BOARD NO.		COMPONENT PATH
VEP82105F:NTSC VEP82105G:PAL		
KR2A28(8/19)		SCM19

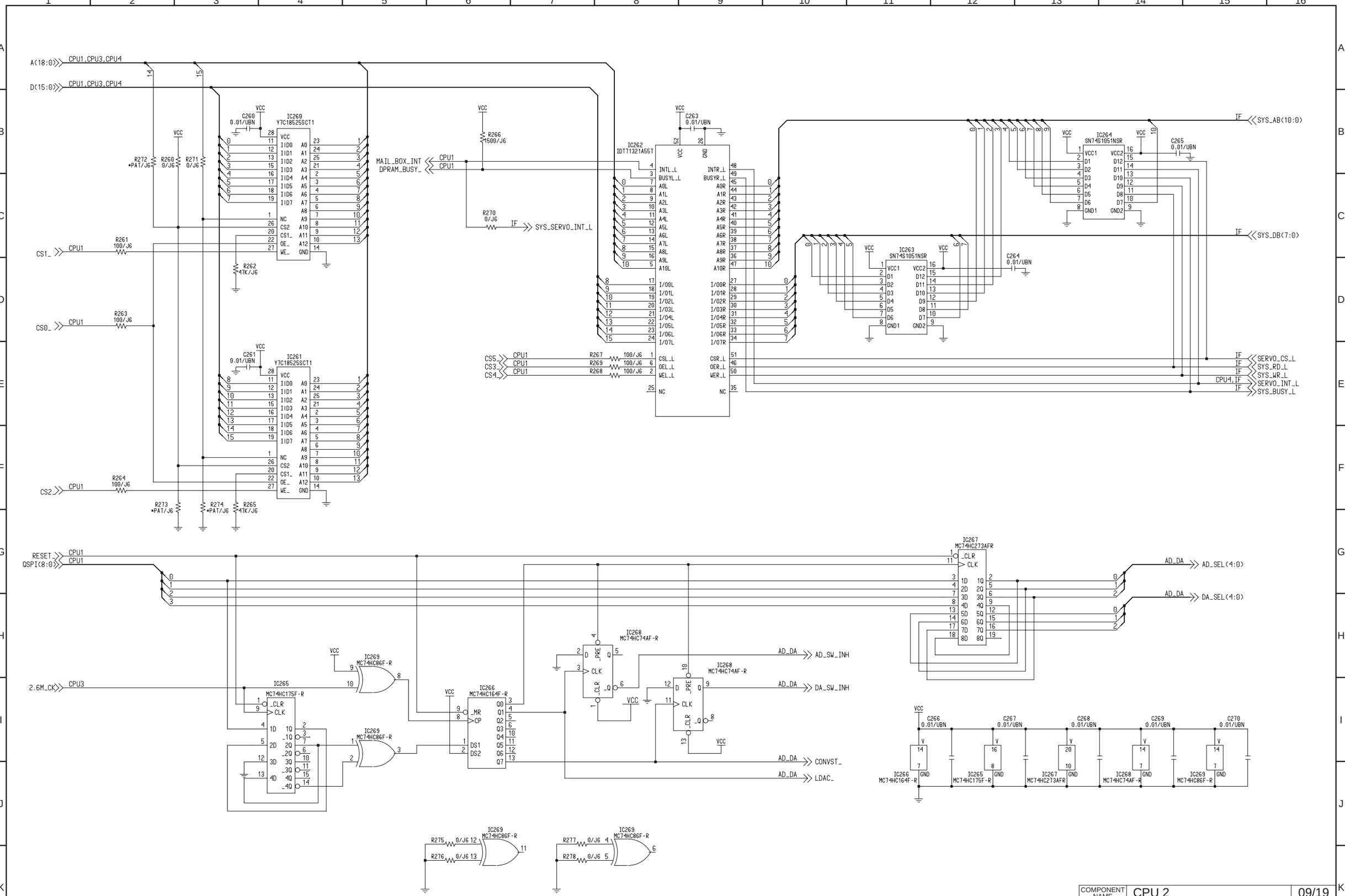

COMPONENT NAME	CPU 2	09/19
CIRCUIT BOARD NO.	COMPONENT PATH	
VEP82105F:NTSC VEP82105G:PAL		
KR2A28(9/19)		SCM20

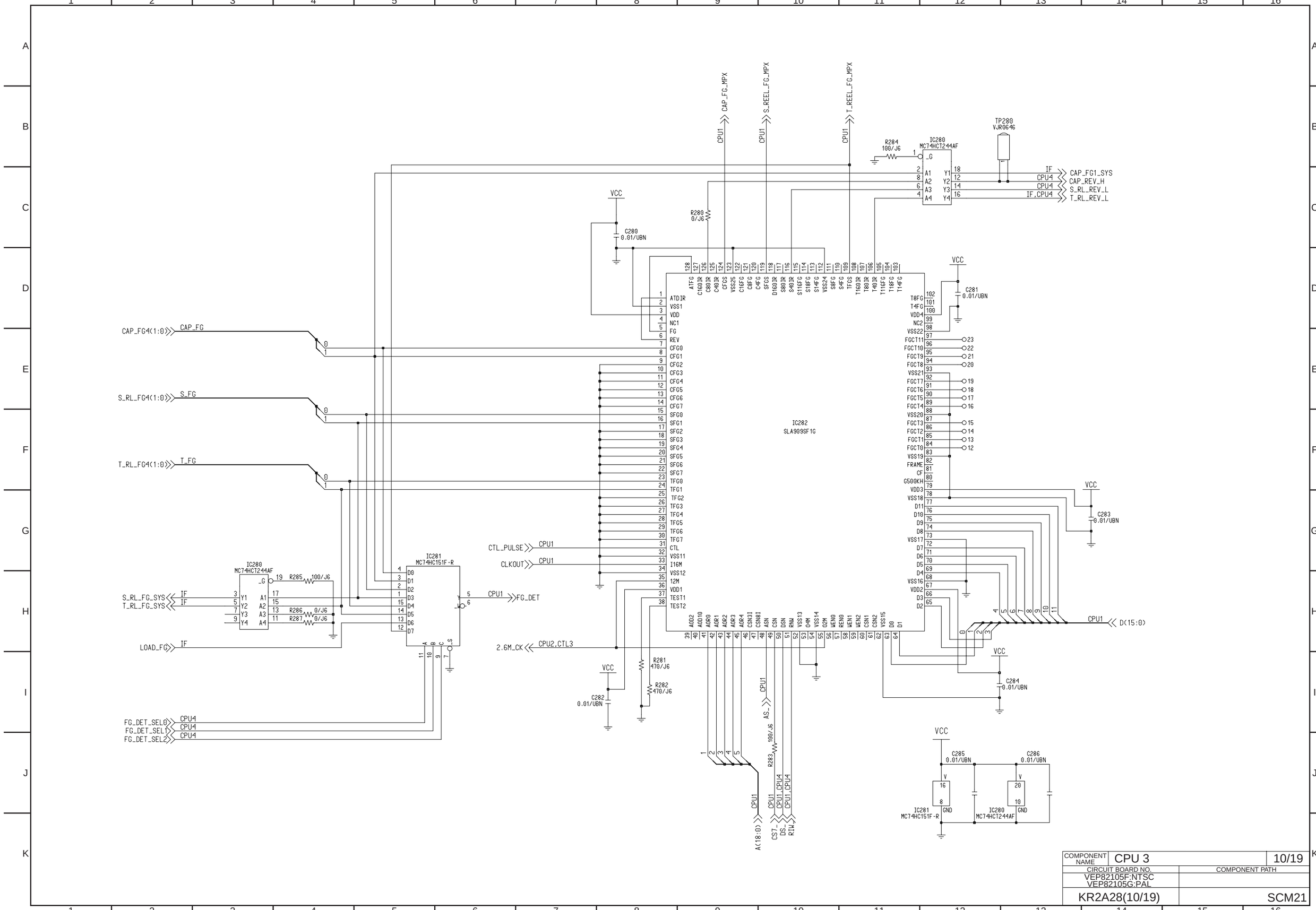

COMPONENT NAME	CPU 3	10/19
CIRCUIT BOARD NO.	COMPONENT PATH	
VEP82105F:NTSC VEP82105G:PAL		
KR2A28(10/19)	SCM21	

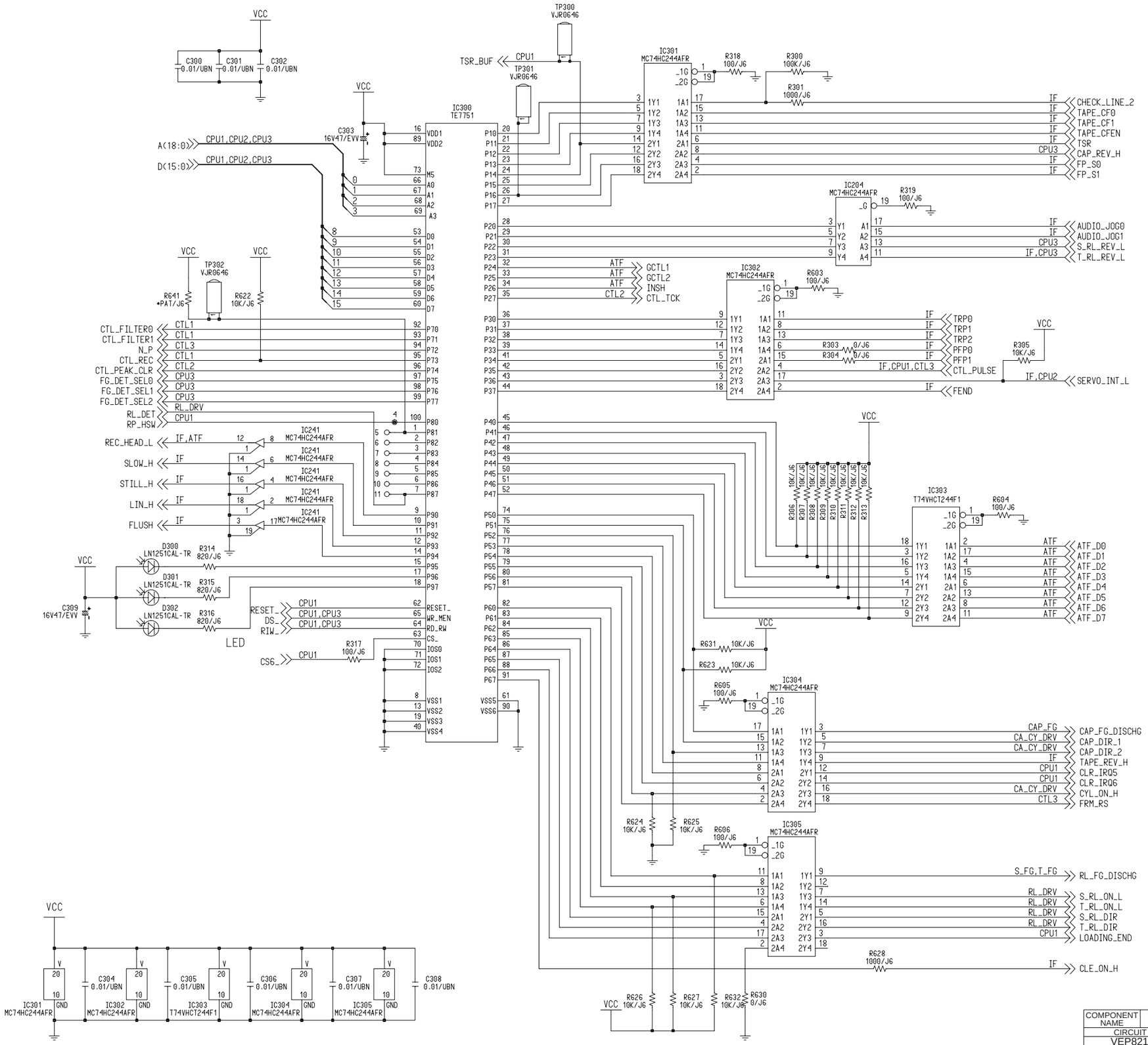

COMPONENT NAME	CPU 4	11/19
CIRCUIT BOARD NO.	COMPONENT PATH	
VEP82105F:NTSC VEP82105G:PAL		
KR2A28(11/19)		SCM22

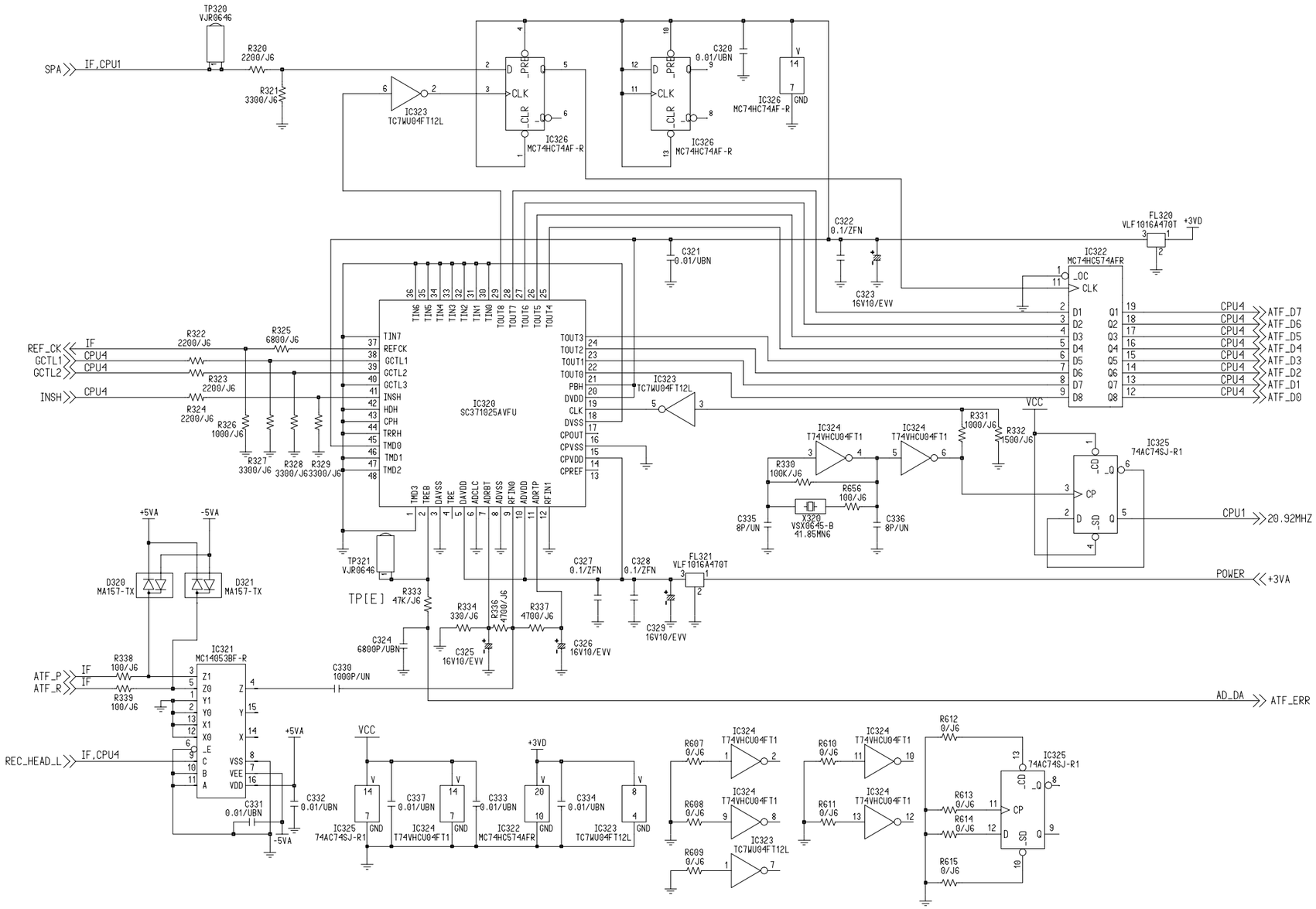

COMPONENT NAME	ATF	12/19
CIRCUIT BOARD NO.		COMPONENT PATH
VEP82105F:NTSC VEP82105G:PAL		
KR2A28(12/19)		SCM23

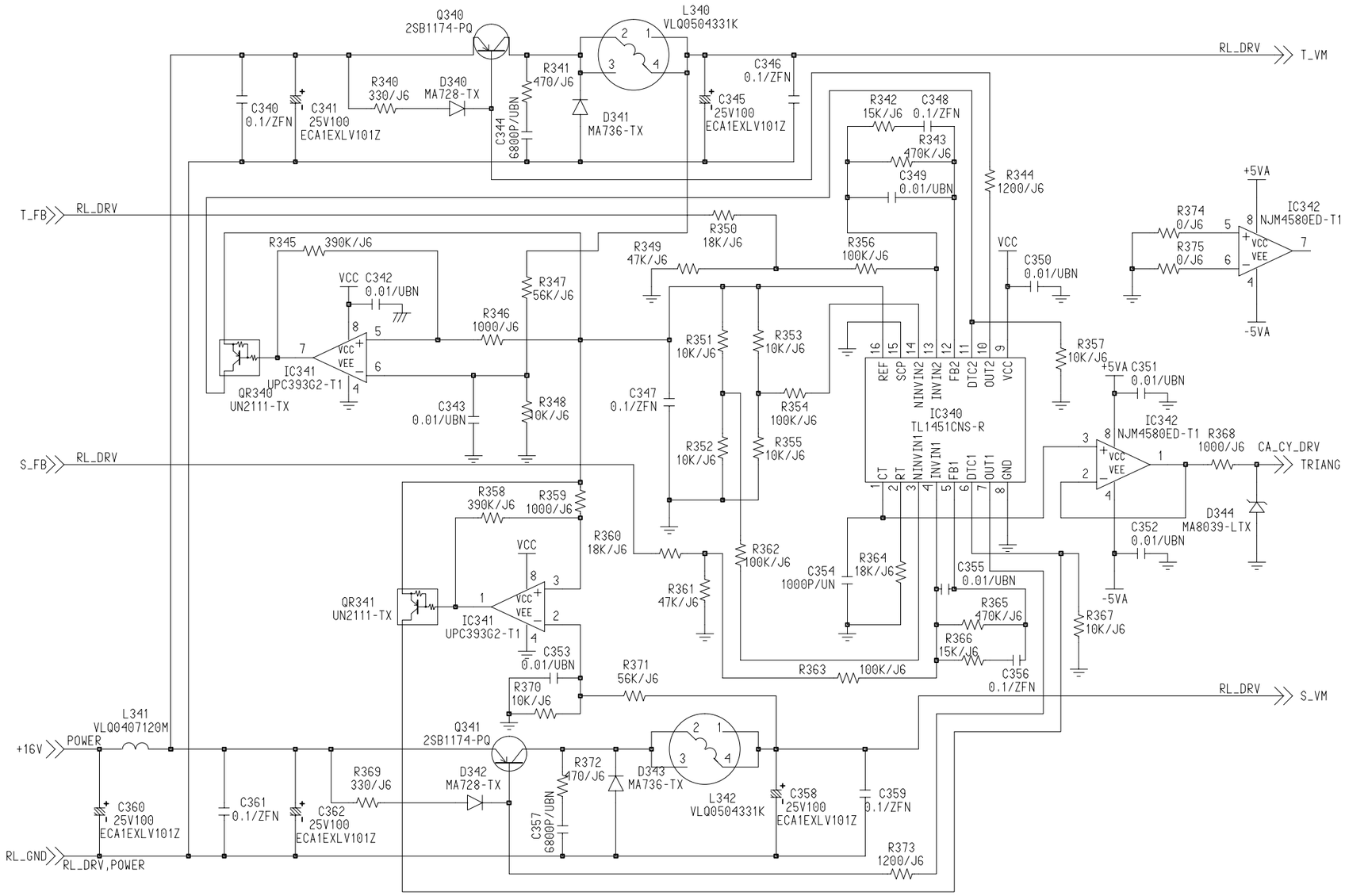

COMPONENT NAME	SW 1	13/19
CIRCUIT BOARD NO.	COMPONENT PATH	
VEP82105F:NTSC VEP82105G:PAL		
KR2A28(13/19)		SCM24

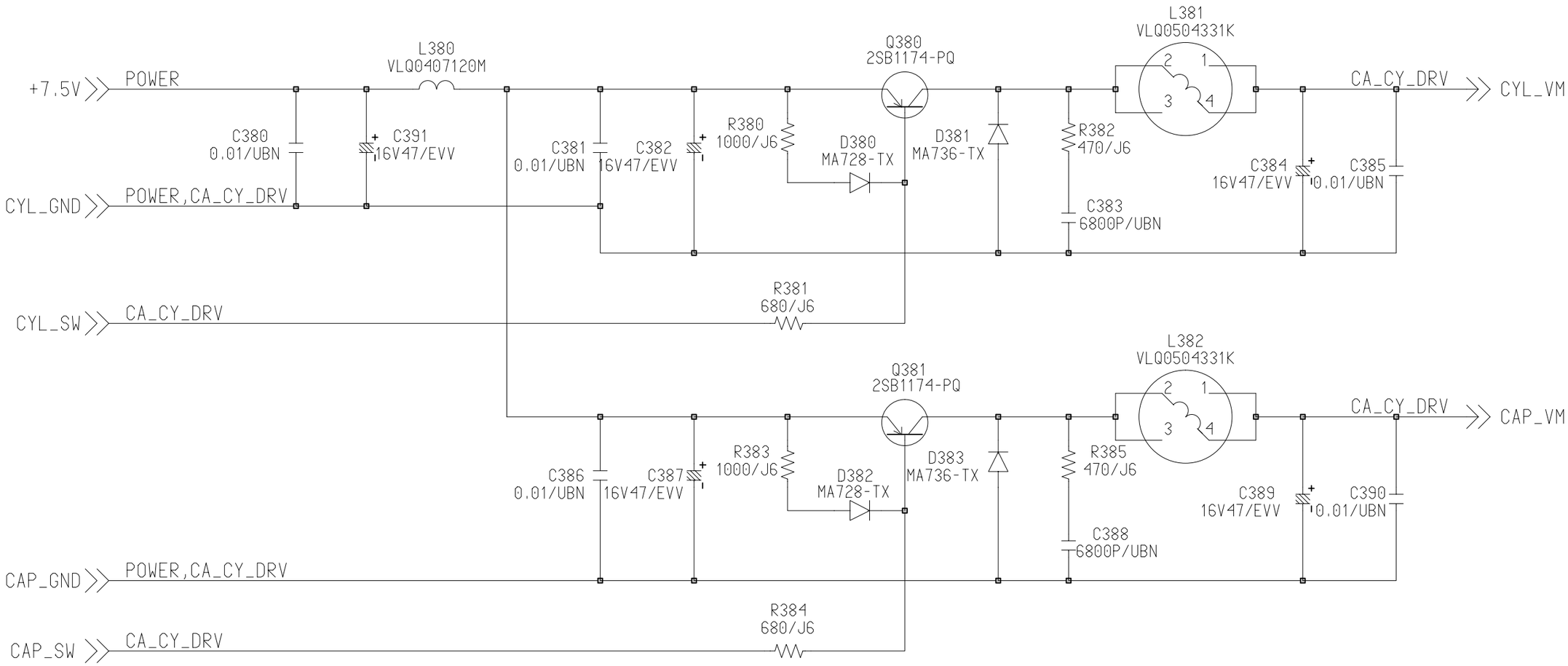

COMPONENT NAME	SW 2	14/19
CIRCUIT BOARD NO.	COMPONENT PATH	
VEP82105F:NTSC VEP82105G:PAL		
KR2A28(14/19)	SCM25	

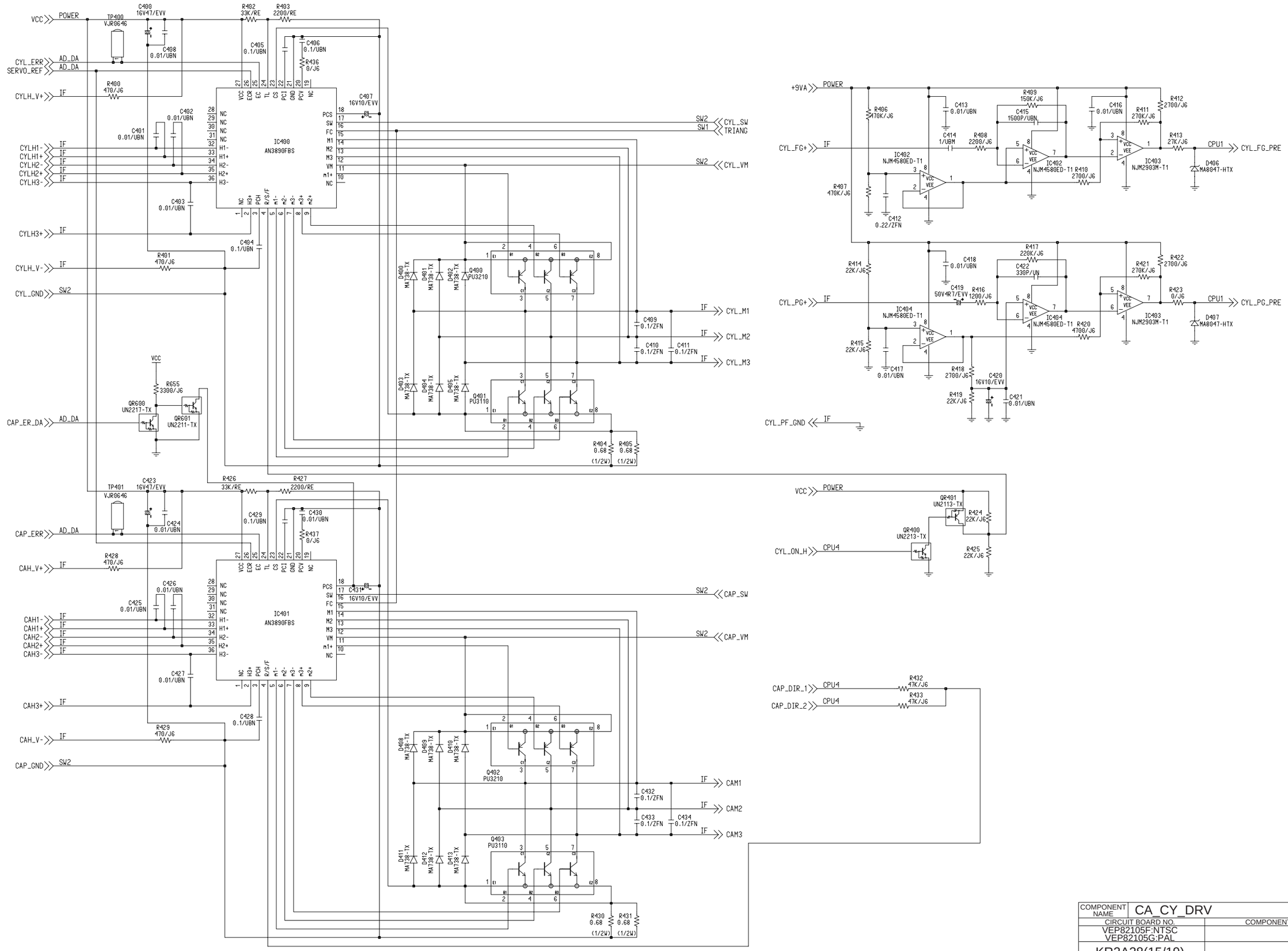

COMPONENT NAME	CA_CY_DRV	15/19
CIRCUIT BOARD NO.	COMPONENT PATH	
VEP82105F:NTSC VEP82105G:PAL		
KR2A28(15/19)		SCM26

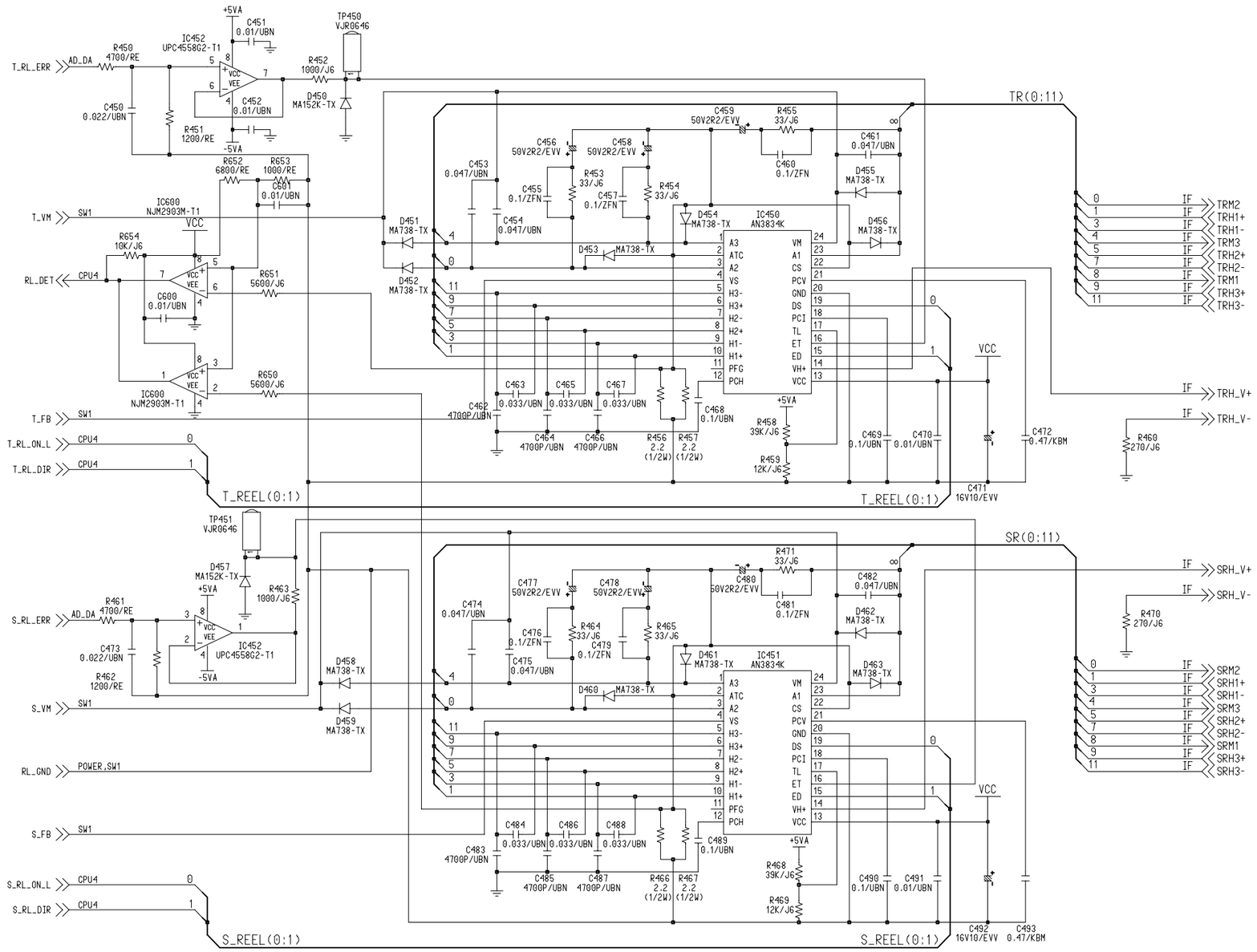

COMPONENT NAME	RL_DRV	16/19
CIRCUIT BOARD NO.	COMPONENT PATH	
VEP82105F:NTSC VEP82105G:PAL		
KR2A28(16/19)		SCM27

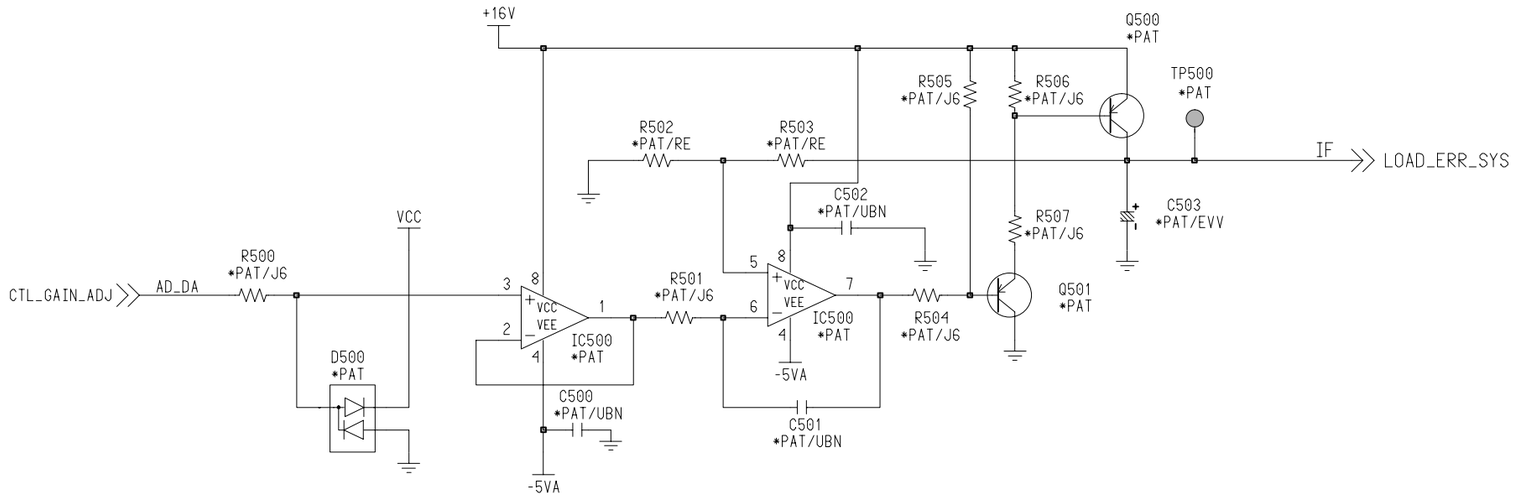

COMPONENT NAME	LM_DRV	17/19
CIRCUIT BOARD NO.	COMPONENT PATH	
VEP82105F:NTSC VEP82105G:PAL		
KR2A28(17/19)	SCM28	

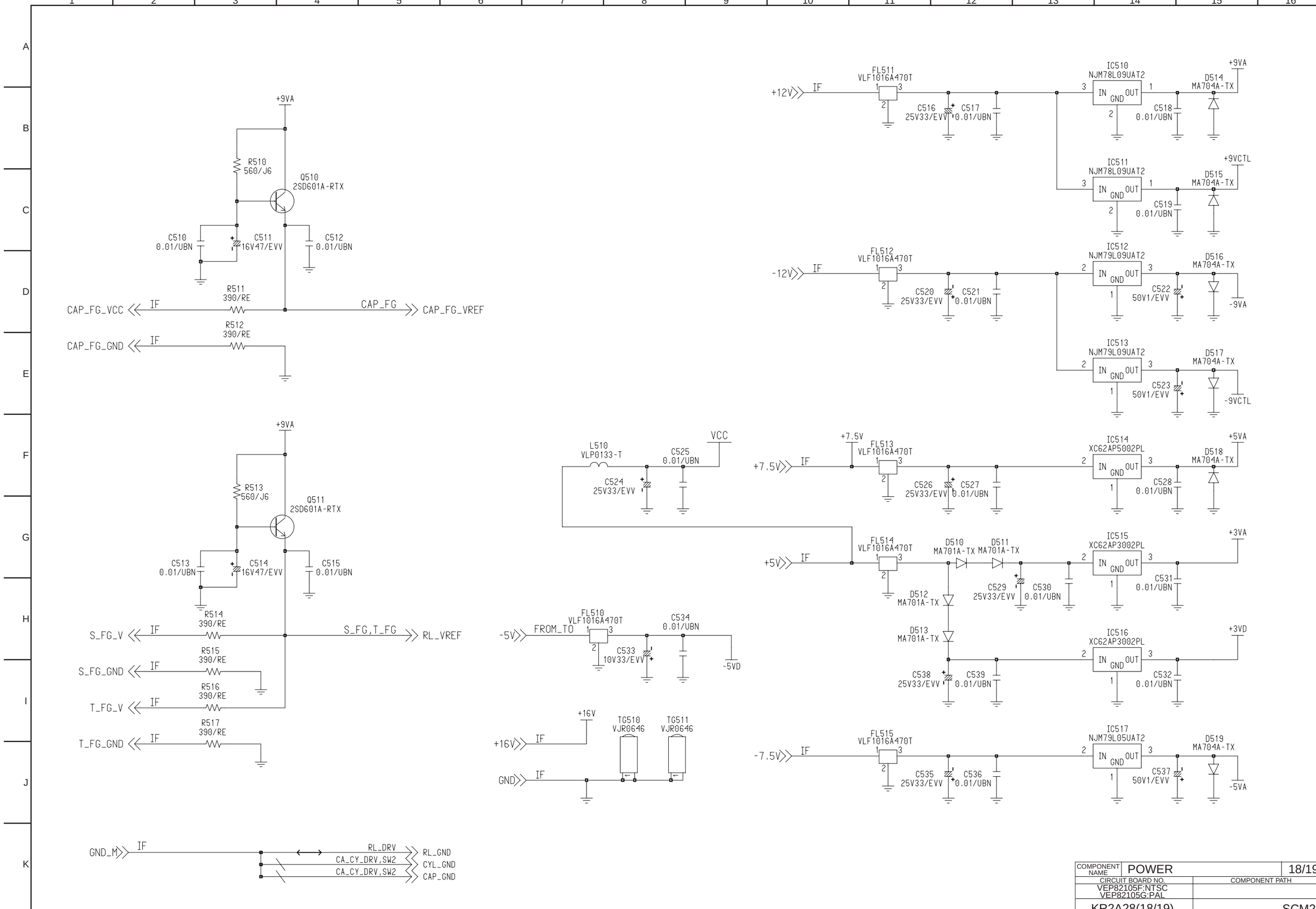

COMPONENT NAME	POWER	18/19
CIRCUIT BOARD NO.		COMPONENT PATH
VEP82105F:NTSC VEP82105G:PAL		
KR2A28(18/19)		SCM29

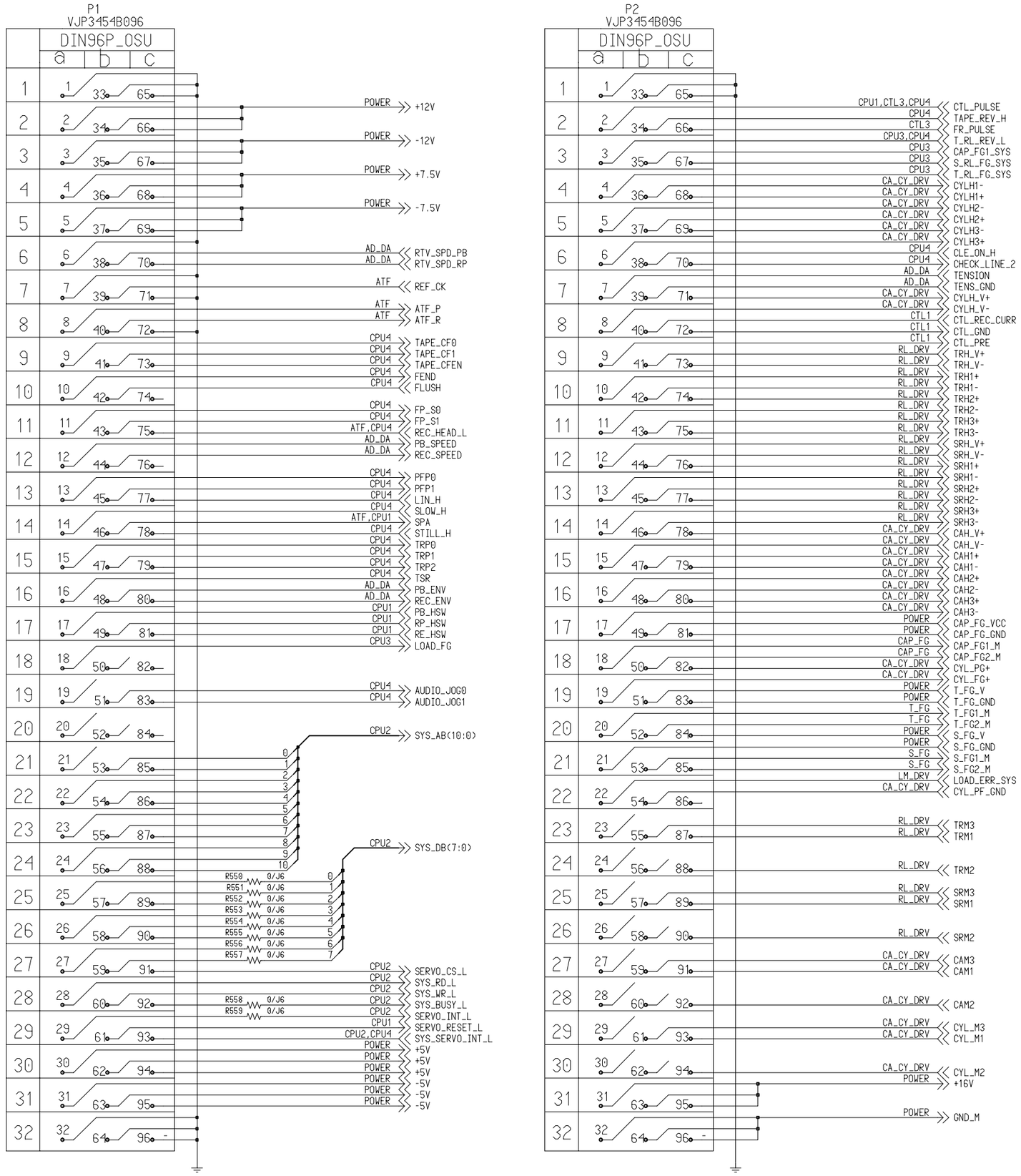

COMPONENT NAME	IF	19/19
CIRCUIT BOARD NO.	COMPONENT PATH	
VEP82105F:NTSC VEP82105G:PAL		
KR2A28(19/19)		SCM30